Student: Paul Runov

Course: ECE 5210

Subject: Lab 5, Polyphase Decimation and Interpolation

Date: April 12, 2026

---

1 Introduction

The purpose of this lab is to implement decimation and interpolation in code. The code will be tested on a board to see how many taps can be extracted from this improved filtering method.

2 Theory

Polyphase Decimation and Interpolation

In our studies, we have observed that a naively implemented Finite Impulse Response (FIR) filter has limitations on the number of taps that can be utilized efficiently on hardware. To address this, we implement polyphase decimation and interpolation to increase the tap limit, thus enhancing the filter's performance and efficiency.

Polyphase Decimation

Recall that a discrete-time system $h[n]$ can be represented in terms of its polyphase components $e_k[n] = h[nM + k]$, where M is the decimation factor. The system response in the z-domain is given by:

$$Y(z) = H(z)X(z) = \sum_{k=0}^{M-1} E_k(z^M)X(z)z^{-k}. \tag{1}$$

This implementation is particularly useful in the context of decimation. It allows us to swap the order of decimation and filtering, thereby downsampling first and filtering afterwards. This approach reduces computational costs by eliminating unnecessary calculations on samples that will be discarded. The block diagram for decimation is shown below

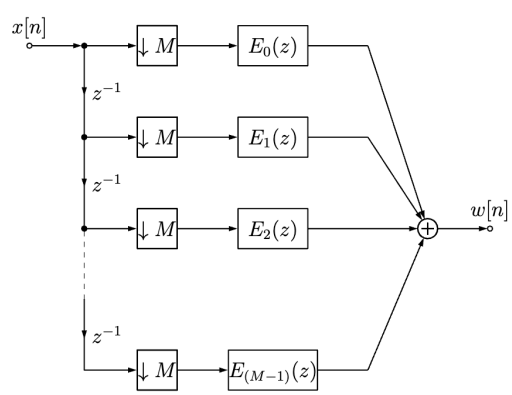

Figure 1: Polyphase Decimation Block Diagram

Polyphase Interpolation

Similarly, for polyphase interpolation, the same principles apply but in reverse order. We increase the number of samples before applying the filtering process. The block diagram of this process is shown below in figure 2. This approach improves efficiency by only processing the necessary samples and minimizing the workload on the hardware.

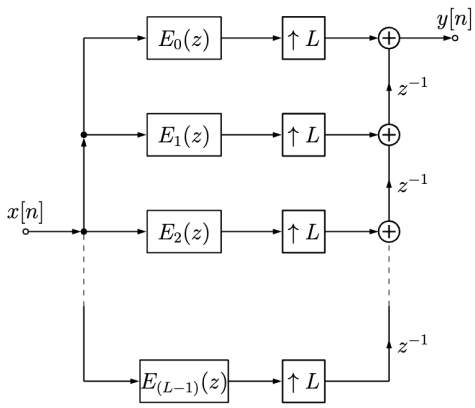

Figure 2: Polyphase Interpolation Block Diagram

3 Results

Board Implementation

Q: What is the limit of the number of taps you could get before the processor could not keep up?

A: The limit on my board was 1200 taps

Q: Why do you increase the number of taps by increments of 100?

A: Because the lengths of each polyphase filter (E) is equivalent to the $\frac{number\ of\ taps}{decimation\ factor}$

System Response

The phase response is that of a simple pass-through system with polyphase decimation and interpolation and is shown in figure 3. The magnitude is constant because the signal isn't being changed during the decimation/interpolation. The phase is also linear. As the frequency sweep finishes off, the magnitude seems to taper off.

At about 220 Hz, the signal starts becoming noisy because of aliasing.

4 Discussion and Conclusions

Writing Code

This lab was harder than the previous labs, but it wasn't as terrible as I was expecting it to be. I found that the hardest part of lab was understanding what the algorithm was doing. Once I understood the algorithm, I cooked up the decimation and interpolation in one evening.

The hardest part of the lab for me wasn't the decimation part, but understanding the buffers for the FIR, and keeping track of all corresponding values.

Debugging

Initially my first value was correct in the decimation, but I was going off after that. I realized that I was checking if my index was 99 and resetting to 0. But the problem with that is 99 % 99 is zero and so is 0 % 99. This means I was triggering the decimation twice, instead of once every 100 samples.

I also had everything written, and couldn't put it everything together for 3 days. I ended up clearing all of my warnings one evening, and that solved all of my issues. I felt really stupid after than.

Summary

Having to explain this to others many times over, and in ways that makes sense to them, gave me a really good understanding of how the decimation and interpolation worked.

Overall this was a really good practice in writing clean, concise, and efficient code, and being able to keep track of the big picture through the minute details of writing the code. I learned how to explain concepts to others in a way that would make sense to them without giving them the code. It also gave me a little boost in morale by helping me remember I'm not total trash at writing code ;)

5 Plots

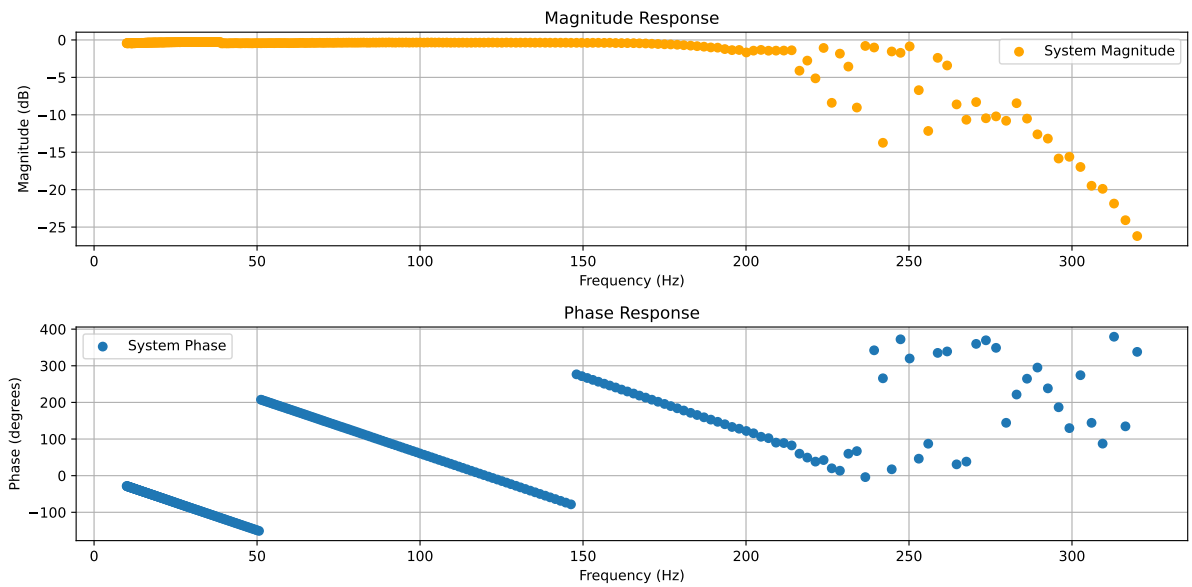

Figure 3: System Response